TECHNICAL NAME: *DENTAL IMPLANT COMPONENTS*

COMMERCIAL NAME: *COCR COMPONENT*

COMMERCIAL MODEL :

Ucla HEX (all models)

Ucla TRI (all models)

Ucla CMI (all models)

Ucla HI (all models)

Coping MPC

Complete list with product codes is on page 10 - **Annex A: list of product codes.**

PRODUCT DESCRIPTION:

The CoCr Components are constituted by a **metallic base** in Chrome-Cobalt material (in compliance with ASTM F-1537) and a burnout supplement, in Polyoxymethylene (Copolimer) plastic. The metallic base has at its end a connection that can be rotational (R) for multiple prostheses or anti-rotational (AR), for single prostheses. These components are submitted to na over-casting process, in a prosthetic laboratory, where the plastic supplement, that is used as support to the molding resin is melted and replaced by a metallic alloy (alloy added in the prosthesis laboratory where this process is produced) that adheres to the Chrome-Cobalt base manufactured by DERIG, resulting in a customized abutment for each clinical case.

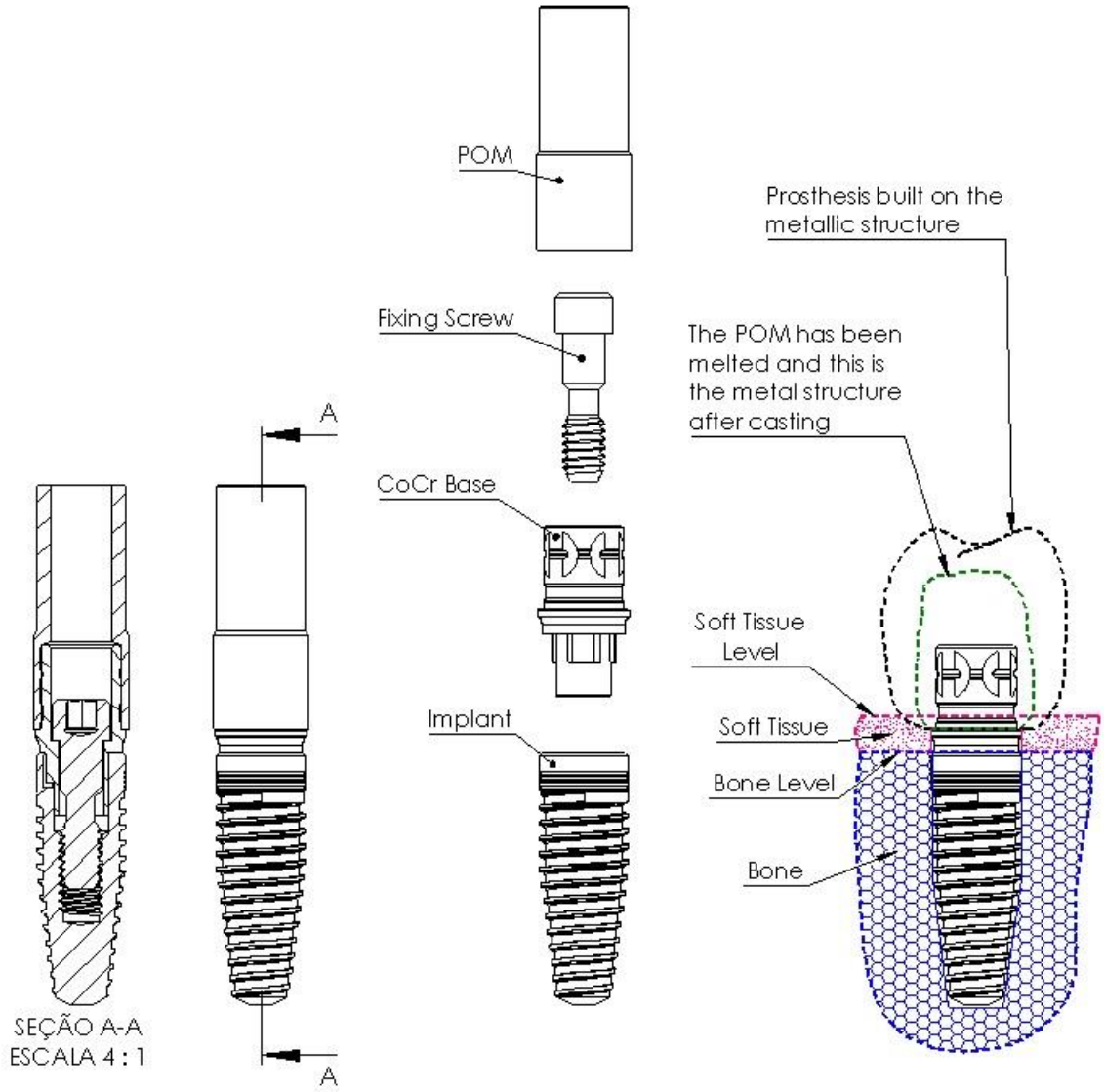

The **CoCr Components** change due to the type of connective interface for **DERIG** Implants**:** HEX, TRI, CMI, HI, Coping Mini Abutment Conical and Abutment Conical, in diameters and heights, according to the manufacturing models indicated below:

UCLA COCR R:

- Ucla HEX NP R: autment with platform connective with HEX NP implants.
- Ucla HEX RP/UP R: abutment with platform connective with HEX RP and HEX UP implants.
- Ucla HEX WP R: abutment with platform connective with HEX WP implants.

- Ucla TRI NP R: abutment with platform connective with TRI NP implants.
- Ucla TRI RP/UP R: abutment with platform connective with TRI RP/UP implants.
- Ucla TRI WP R: abutment with platform connective with TRI WP implants.

- Ucla CMI NP R: abutment with platform connective with CMI NP implants.

- Ucla HI R: abutment with platform connective with HI implants.

UCLA COCR AR:

- Ucla HEX NP AR: abutment with platform connective with HEX NP implants.
- Ucla HEX RP/UP AR: abutment with platform connective with HEX RP and HEX UP implants.
- Ucla HEX WP AR: abutment with platform connective with HEX WP implants.

- Ucla TRI NP AR: abutment with platform connective with TRI NP implants.
- Ucla TRI RP/UP AR: abutment with platform connective with TRI RP/UP implants.
- Ucla TRI WP AR: abutment with platform connective with TRI WP implants.

- Ucla CMI NP AR: abutment with platform connective with CMI NP implants.

- Ucla HI AR: abutment with platform connective with HI implants.

COPING COCR:

- Coping MPC, Coping with rotational platform connective with the Abutment Conical Component.

Note: Component platform is the part that supports the implant.

Connecting components:

HEX: External hexagon → mounts on hex system implants.

TRI: Triple Internal channel → mounts on tri system implants.

CMI: Cone Morse Indexado → mounts on implant system CMI.

HI: Internal hexagon → Mounts on hi system implants.

MPC: Mini Tapered pillar → mounts on MPC components.

Compatibility x Platform:

NP: Narrow plataform (narrow platform) → mounts on NP implants;

RP-UP: Regular plataform (regular platform) → mounts on RP implants and implants UP;

WP: Wide plataform (wide platform) → mounts on WP implants

Platform Code	Measure the diameters of the platforms "P" as the system (mm) AR and R models									
	HEX		**TRI**		**CMI**		**HI**		**MPC**	
	Ø "P"	**"L"**	**Ø "P"**	**"L"**	**Ø "P"**	**"L"**	**Ø "P"**	**"L"**	**Ø "P"**	**"L"**
NP	3,5	11,2	3,5	11,2	2,75	11,2	3,4	11,2	4,8	12,5
RP	-	-	-	-	2,75	11,2	-	-		
RP-UP	4,1	11,2	4,3	11,2	-	-	-	-		
WP	5,1	11,2	5,0	11,2	-	-	-	-		

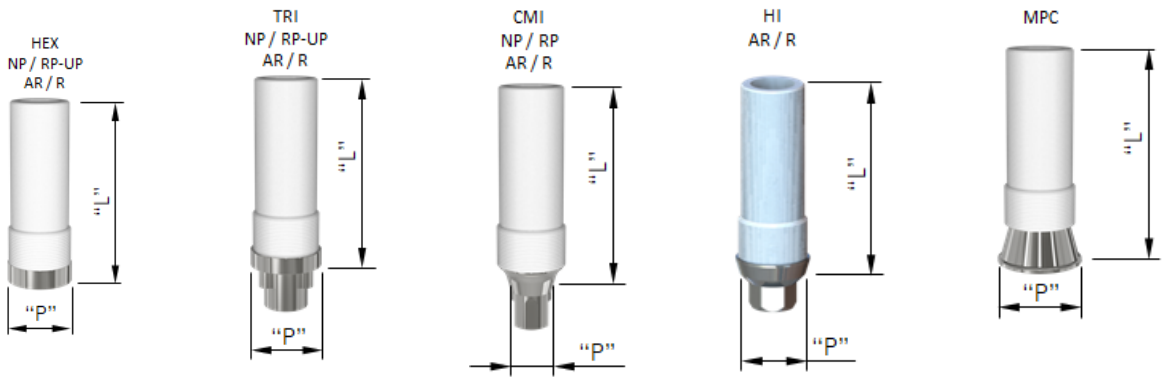

PRODUCT COMPOSITION

A) **Metallic Part** : CoCr in compliance with ASTM F1537 – ISO 5832-12

B) **Burnout Part**: Polyoxymethylene (Copolymer) Plastic.

C) **Accessory:** Fastening Screw - ASTM F136-ISO 5832-3

USE INDICATION:

The DERIG CoCr Components are recommended for patients with unit, partial or total absence of teeth.

The primary function of the CoCr Component is to actuate as a support abutment to receive the fixed or removable prosthesis.

The Uclas are installed and fixed by use of a screw on the implants.

The Uclas with anti-rotational system (AR) are recommended for single prostheses.

The Uclas with rotational system (R) for multiple prostheses.

Copings are recommended to be mounted on the abutments through use of a screw, in case Mini Abutment Conical and Abutment Conical.

Copings with anti-rotational system (AR) are recommended for single prostheses and with rotational system (R) for multiple prostheses.

These components are used in the financing process, in the protection laboratory, where the (POM) cylinder, which serves as a support for the molding box, is replaced and replaced by metal alloy (alloy used in the prosthesis laboratory, where this process is done) that adheres to the base CoCr manufactured by DERIG, forming a personalized pillar for each clinical case. After the process in the laboratory, without clinical return, only based on CoCr, with protected protection, contact the patient, as the plastic was overcast in the laboratory.

PRECAUTIONS AND WARNINGS

The DÉRIG CoCr components should be over-cast in laboratory, using the adequate tools and equipment.

The prostheses prepared on the components should be installed by qualified professionals and with experience.

The professional should plan and prepare a prosthetic execution plan.

The professional should submit the patient to mouth disinfection prior to application of the product.

The professional should check the information included in the product's packing, specifically as related to product identification.

The professional should inform the patient as related to the adequate oral hygiene and the need of a periodic post-installation follow-up.

The limit of torque in fixing of the components for threads of M2.5 and M2.0 should be complied with and a maximum force of 35Ncm should be applied. For the M1.6 and M1.8 threads a maximum force of 32Ncm should be applied and for M1.4 thread a maximum force of 15Ncm should be applied

In case of immediate loading, the primary stability of the implant should be checked.

It is recommended that the final prosthesis be sanitized prior to installation.

CONTRAINDICATIONS

It is recommended that the prostheses prepared on the DÉRIG CoCr components should not be installed on patients with chronic periodontal inflammation, patients not prepared to be submitted to oral rehabilitation, inadequate oral hygiene and inadequate parafunctional habits such as: bruxism, non treatable occlusion/articulation problems, active intraoral infection.

STORAGE, TRANSPORTATION, PRESERVATION AND HANDLING

The DERIG CoCr components should be stored and/or transported in their original packing and maintained in dry location and at temperature of 25ºC ±2 and humidity 70%. We recommend that the products be organized in such a manner that the information indicated in the packing can be visible.

The DERIG CoCr components are identified according to the rules in force. The identification label provided inside the product packing should be attached to the patient medical record.

VALIDITY AND LOT

Manufacturing date, validity and lot, see packing.

DISPOSAL:

All the products and material used in the dental implant installation surgery can put at rick the health of those that handled them after their usage.

Prior to disposal, we recommend checking and complying with the legislation in force.

CONTENT

The DÉRIG CoCr Components are supplied in a single part or in two parts, one Abutment and one screw, use instruction and labels for medical record.

HANDLING INSTRUCTION

If it is a component of primary use in the laboratory, the CoCr component is supplied non-sterile, so after the making of the prosthesis, the final component should be sanitized and sterilized before use.

After the process in the laboratory, without clinical return, only based on CoCr, with protected protection, contact the patient, as the plastic was overcast in the laboratory. The decive in not can be re-sterilized before the initial use.

Cleaning:

Wash with enzymatic detergent, diluted according to the manufacturer's information on ultrasound equipment;

Rinse in distilled water using a nylon brush until all the solution is removed from the component;

Dry with compressed air;

Visually inspect to find the waste in the component;

If it's detected residues, repeat steps 1 to 4 until the component is clean. If deemed necessary, one should use a nylon brush to aid cleaning.

***STERILIZATION*:**

Make use of a steam autoclave equipment;

Package the component in a surgical grade paper packing;

Configure the equipment to > 121ºC to < 134°C – 15 minutes After sterile, the component must be opened in the appropriate tray and used immediately.

Check if the dimensions correspond to your prosthetic plan. Open the pack. Stick the separate labels on the patient medical record.

Prepare the prosthesis according to the prosthetic plan.

Install the prosthesis on the implant or on the abutment, using the adequate tools and in case of fixing by a screw, use the indicated torque

Shape the mouth of the patient through a technique known as molding. In this process it is necessary to use a component called transferor company that must be purchased separately. In the lab, you will need a laboratory component called, which is used to simulate the implant into the patient's mouth, which also purchased separately**.**

After obtaining the mould, screw the analogous under the transferor that is fixed in the template, in the case of open tray molding or screw the analogue of the transferor company and fit the transferor company into the mold, when used the closed tray molding. Then, pour the rubber material to simulate the soft tissue of the patient and then pour the plaster to completely cover the analogous. After drying, remove the plaster mould, unscrew the transferor of the analogous. Right now if you have a copy of the patient's mouth.

Mount the CoCr base on the analogue of, personalize plastic cylinder from the base as needed and to perform the waxing. After waxing, give the casting process.

The alloy chosen for casting should be a League CoCr base and also compatible with the material used in the prosthesis. In case of use of ceramics, the same should not be applied directly on the base, that is, waxing should fully cover the outer part of the component. If applied to pottery directly on the parts that were not covered by the metallic alloy of sobrefundição may be broken. During the waxing, take care that there is no invasion on the edges of the component that will make contact with the implant. After casting, the minimum thickness must be between 0, 3 mm and must-make sure that the inner part of the component, where the screw is supported, is preserved without remains of casting material that may impede the passage of the bolt or compromise the fixation of the prosthesis. In the finishing process must pay attention to the prosthetic interface is not damaged.

ADVERSE EFFECTS

If the technique used by the professional is not adequate, the esthetic may be jeopardized, as well as the correct operation. Mainly occlusion problems can occur, overloading in an unequal manner the dental arch.

In case of loosening of the screw, the micro-movements of the restoration under load conditions can irritate the peri-implant tissues.

REUSE / STERILIZATION / REPROCESSING

Reuse of the product is prohibited.

Resterilization of the product is prohibited.

Reprocessing the product is prohibited.

We recommend that when sterilizing the CoCr component it is coupled to the implant to install the prosthesis.

These recommendations can be found on the product label.

Reuse of the product may result in contamination of the patient.

ATTENTION

Product for dental usage, to be used only by professionals qualified for technical application.

Supplied UNSTERILE.

Manufacturer: Dérig Ind. e Com. de Materiais Médico-Odontológicos Ltda.

Rua Lapa, 479 - CEP 06419-020 06419-020

Barueri - São Paulo - Brasil

Telephone/Fax +55 0800 777 1991 | 11 4161 8090

www.derig.com.br - derig@derig.com.br

Technical Responsible Professional: Edson Aparecido Meronho – CREA-SP nº 5063423447

ANVISA Registration Nº: 80165910009

European Representative: Exaktus – Material de Reabilitação Oral

Located at Rua Laborim 68, 4430-128 Vila Nova de Gaia,

Portugal

Telephone:+351 224 068 098

geral@exaktus.pt

SYMBOLISM

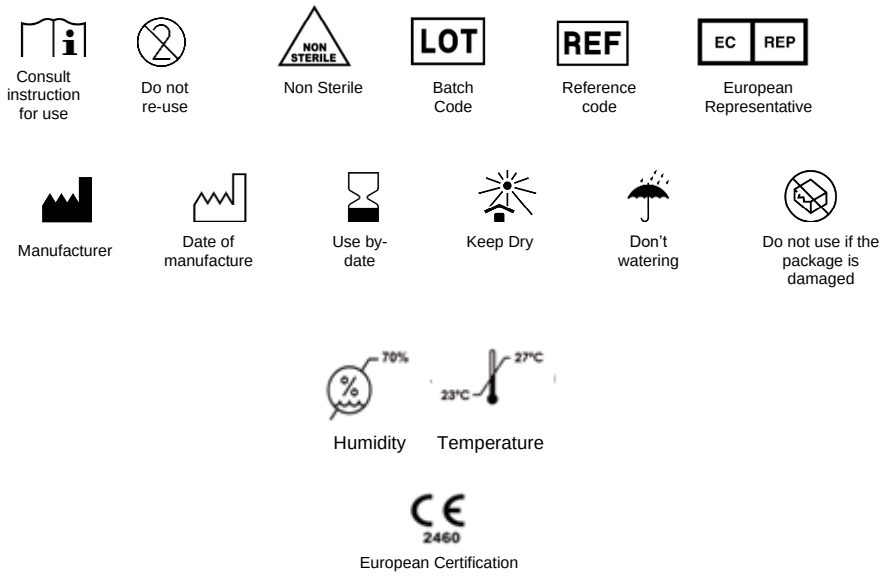

Emission: 10/08/2020

This instruction of usage was edited originally in the Portuguese language.

Annex A: list of product codes.

Technical Name: Dental Implants Components

Trade name: CoCr Component

Code	Description
02.03.07.172	Ucla HEX NP R
02.03.07.162	Ucla HEX NP AR
02.08.07.272	Ucla HEX RP-UP R
02.08.07.262	Ucla HEX RP-UP AR
02.03.07.372	Ucla HEX WP R
02.03.07.362	Ucla HEX WP AR
02.12.07.172	Ucla CMI NP R
02.12.07.162	Ucla CMI NP AR
02.04.07.172	Ucla TRI NP R
02.04.07.162	Ucla TRI NP AR
02.04.07.272	Ucla TRI RP-UP R
02.04.07.262	Ucla TRI RP-UP AR
02.04.07.372	Ucla TRI WP R
02.04.07.362	Ucla TRI WP AR
02.09.07.272	Coping MPC
02.15.07.162	Ucla HI AR
02.15.07.172	Ucla HI R